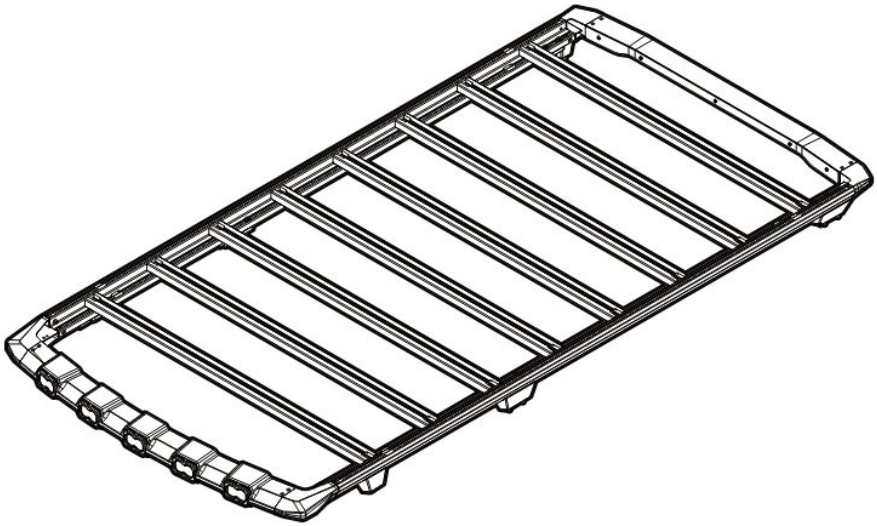

DEK™

DIRECT MOUNT

ASSEMBLY

Table of Contents

❶ Introduction ____ 3

Important Notes & Tips 3
Safety Instructions 4
Parts and Tools 5

❷ Assembly ____ 11

Frame Assembly 11
Forward Mount Installation (5th Gen Toyota 4Runner ONLY) 17
Load Bar Installation 18
Torque Frame Bolts 22
Roof Installation 23
OEM Roof Rails 23
Naked Roof 28
DEK™ Light Bar Wiring 35

❸ No Worries Limited Warranty ____ 37

Estimated Completion Time

Full DEK™ Assembly: **2 Hours**

Important Notes & Tips

1. Assemble your DEK™ Panel Kit on a flat, protected surface.
2. At a certain point in the installation process, it is necessary to lift the DEK™ onto the vehicle. This will require a 2 - 3 person team lift.
3. Assemble and position the DEK™ frame so that the Küat logo is toward the front of the vehicle.
4. Periodically check tightness of DEK™ bolts and screws.
5. This guide depicts the assembly and installation process using a 5th Generation Toyota 4Runner DEK™ model. Assembly and installation for all models of the DEK™ are identical with the exception of the quantity of provided hardware and load bars.

   Refer to pages 5 - 9 to see quantities of provided hardware for your specific DEK™ model.

⚠ WARNING

When using your DEK™, load your gear in GREEN zones.
Do not place weight in RED zones.

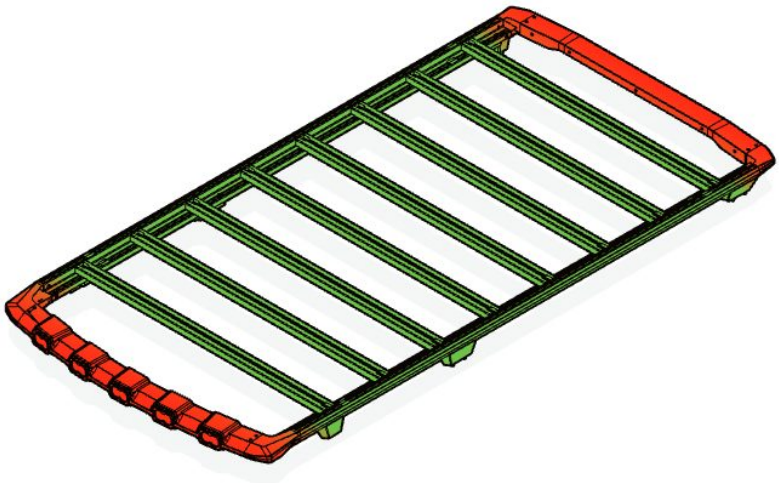

SAFETY INSTRUCTIONS

DEK™ DIRECT MOUNT

⚠ WARNING

- Follow instructions for proper assembly, installation and use.
- Check tightness of all bolts and screws periodically.
- Make sure rack is in working condition before each use.
- Maximum weight capacity is 300 lbs evenly distributed. Do not exceed this weight. Verify the weight capacity of your vehicle and crossbars and do not exceed that weight.
- Nose and Tail sections of the DEK™ are not load-bearing.
- If hauling long cargo such as a canoe, ensure the cargo is lifted and secured so that it does not make contact with the nose or tail.
- Do not attach ratchet straps to any point of the DEK™.
- This product is not designed for and should not be used on terrain which requires aftermarket upgrades to your 4WD suspension, or use that includes rock-crawling, jumping, bogging, or high speed off road driving. An experienced overland driver is required to take into consideration the speed of the vehicle and the total weight of thebvehicle load and its distribution when encountering rutted and/or rocky terrain when using this product, and must reduce the load, speed, or both as necessary. Smooth gravel roads are not considered off-road.

NOTICE

- Do not take through an automatic car wash.

⚠ ADVERTENCIAS

- Siga las instrucciones para un correcto montaje, instalación y uso.
- Compruebe periódicamente el apriete de todos los pernos y tornillos.
- Asegúrese de que la estantería funciona correctamente antes de cada uso.
- Capacidad de carga máxima de 300 libras distribuidas uniformemente. No exceda este peso. Verifique la capacidad de peso de su vehículo y barras transversales y no exceda ese peso.
- Las secciones de morro y cola del DEK™ no soportan carga.
- Si transporta una carga larga, como una canoa, asegúrese de que la carga se eleva y se sujeta de forma que no entre en contacto con el morro o la cola.
- No sujete las correas de trinquete a ningún punto del morro o la cola del DEK™.
- Este producto no está diseñado para y no debe ser utilizado en terrenos que requieran mejoras posventa en su suspensión 4x4, o uso que incluya trepar por rocas, saltar, empantanarse, o conducción todoterreno a alta velocidad. Un conductor experimentado debe tener en cuenta la velocidad del vehículo y el peso total de la carga del vehículo y su distribución cuando se encuentre con terrenos rocosos y/o con baches al utilizar este producto, y debe reducir la carga, la velocidad o ambas según sea necesario.
  -Los caminos de grava lisos no se consideran fuera de carretera.

AVISO

- No lo lleve a través de un túnel de lavado automático.

⚠ ADVERTISSEMENTS

- Suivre les instructions pour un assemblage, une installation et une utilisation corrects.
- Vérifier périodiquement le serrage de tous les boulons et vis.
- S'assurer que le support est en état de marche avant chaque utilisation.
- La capacité de charge maximale est de 300 livres réparties uniformément. Ne pas dépasser ce poids. Vérifiez la capacité de poids de votre véhicule et des barres transversales et ne dépassez pas ce poids.
- Les parties avant et arrière du DEK™ ne sont pas porteuses.
- Si vous transportez une longue cargaison telle qu'un canoë, assurez-vous que la cargaison est soulevée et fixée de manière à ce qu'elle n'entre pas en contact avec le nez ou la queue.
- N'attachez pas de sangles à cliquet à un point quelconque du nez ou de la queue du DEK™.
- Ce produit n'est pas conçu pour et ne doit pas être utilisé sur des terrains qui nécessitent des améliorations après-vente de la suspension de votre 4x4, ou pour une utilisation qui inclut le franchissement de rochers, les sauts, l'enlisement ou la conduite hors route à grande vitesse. Un conducteur expérimenté doit tenir compte de la vitesse du véhicule et du poids total de la charge du véhicule et de sa répartition lorsqu'il rencontre des ornières et/ou un terrain rocailleux lorsqu'il utilise ce produit, et doit réduire la charge, la vitesse, ou les deux, si nécessaire.
  -Les routes de gravier lisses ne sont pas considérées comme hors route.

AVIS

- Ne pas passer par un lave-auto automatique.



(1) DEK™ LED Nose

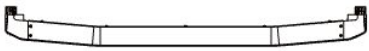

(1) DEK™ Tail



(1) Left DEK™ Frame



(1) Right DEK™ Frame

(1) Wire Hider Sleeve



(1) Wire Harness

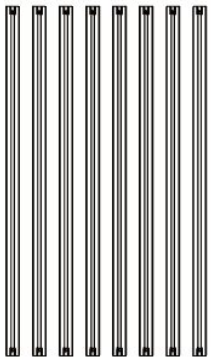

(8) DEK™ Load Bars



Driver 002657 Pass 002658
(2) Rear Direct Mounts



Driver 002655 Pass 002656
(2) Middle Direct Mounts



Driver 002660 Pass 002661
(2) Front Mounts

Hardware



(10) M8 x 30 Bolts



(10) M8 Nuts



(8) M6 x 14 Bolts



(10) M8 Washers

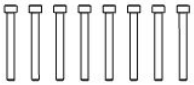

(8) M8 x 40 Bolts



(16) Spacers



(8) M6 Washers



(8) M6 Square Nuts



(16) T-Nuts



(16) M6 x 20 Flathead Bolts



(1) M6 Hex Key



(1) M5 Hex Key



(1) M4 Hex Key

Parts

2010-2024 5TH GEN TOYOTA 4RUNNER | **NON-LIT**



(1) DEK™ Nose

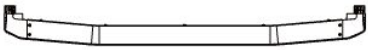

(1) DEK™ Tail



(1) Left DEK™ Frame



(1) Right DEK™ Frame

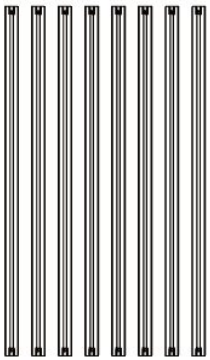

(8) DEK™ Load Bars



Driver **002657** Pass **002658**
(2) Rear Direct Mounts



Driver **002655** Pass **002656**
(2) Middle Direct Mounts



Driver **002660** Pass **002661**
(2) Front Mounts

Hardware



(8) M6 x 14 Bolts



(8) M6 Washers



(8) M6 Square Nuts



(10) M8 x 30 Bolts

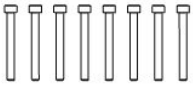

(8) M8 x 40 Bolts



(16) T-Nuts



(10) M8 Nuts



(10) M8 Washers



(16) Spacers



(16) M6 x 20 Flathead Bolts



(1) M6 Hex Key



(1) M5 Hex Key



(1) M4 Hex Key

Parts

2024-PRESENT 4TH GEN TOYOTA TACOMA | **LIT**



(1) DEK™ LED Nose

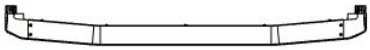

(1) DEK™ Tail



(1) Left DEK™ Frame



(1) Right DEK™ Frame

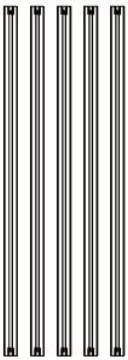

(5) DEK™ Load Bars

(1) Wire Hider Sleeve



(1) Wire Harness



Driver **003038** Pass **003039**

(2) Front Direct Mounts



Driver **003040** Pass **003041**

(2) Rear Direct Mounts

Hardware



(8) M6 x 14 Bolts



(8) M6 Washers



(8) M6 Square Nuts



(8) M8 x 30 Bolts

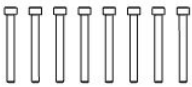

(8) M8 x 40 Bolts



(10) T-Nuts



(8) M8 Nuts



(8) M8 Washers



(10) Spacers



(10) M6 x 20 Flathead Bolts



(1) M6 Hex Key



(1) M5 Hex Key



(1) M4 Hex Key

Parts

2024-PRESENT 4TH GEN TOYOTA TACOMA | **NON-LIT**



(1) DEK™ Nose

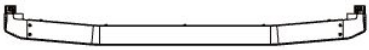

(1) DEK™ Tail



(1) Left DEK™ Frame



(1) Right DEK™ Frame

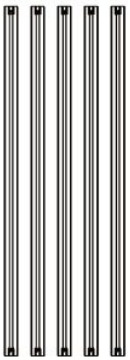

(5) DEK™ Load Bars



Driver **003038** Pass **003039**

(2) Front Direct Mounts

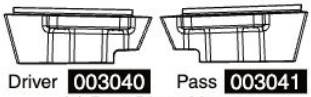

Driver **003040** Pass **003041**

(2) Rear Direct Mounts

Hardware



(8) M6 x 14 Bolts



(8) M6 Washers



(8) M6 Square Nuts



(8) M8 x 30 Bolts

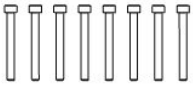

(8) M8 x 40 Bolts



(10) T-Nuts



(8) M8 Nuts



(8) M8 Washers



(10) Spacers



(10) M6 x 20 Flathead Bolts



(1) M6 Hex Key



(1) M5 Hex Key



(1) M4 Hex Key



(1) DEK™ LED Nose

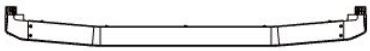

(1) DEK™ Tail



(1) Left DEK™ Frame



(1) Right DEK™ Frame

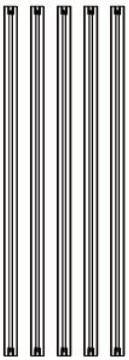

(5) DEK™ Load Bars

(1) Wire Hider Sleeve



(1) Wire Harness



Driver 002686 Pass 002687

(2) Front Direct Mounts



Driver 002688 Pass 002689

(2) Rear Direct Mounts

Hardware



(8) M6 x 14 Bolts



(8) M6 Washers



(8) M6 Square Nuts



(8) M8 x 30 Bolts

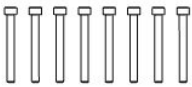

(8) M6 x 55 Bolts



(10) T-Nuts



(8) M8 Nuts



(8) M8 Washers



(10) Spacers



(10) M6 x 20 Flathead Bolts



(1) M6 Hex Key



(1) M5 Hex Key



(1) M4 Hex Key

Parts

2005-2023 GEN 3 | 2 TOYOTA TACOMA **NON-LIT**



(1) DEK™ Nose

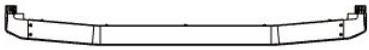

(1) DEK™ Tail



(1) Left DEK™ Frame



(1) Right DEK™ Frame

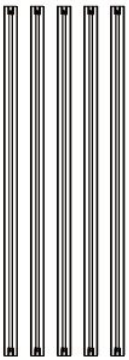

(5) DEK™ Load Bars



Driver **002686** Pass **002687**

(2) Front Direct Mounts



Driver **002688** Pass **002689**

(2) Rear Direct Mounts

Hardware



(8) M6 x 14 Bolts



(8) M6 Washers



(8) M6 Square Nuts



(8) M8 x 30 Bolts

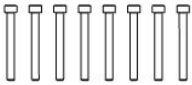

(8) M6 x 55 Bolts



(10) T-Nuts



(8) M8 Nuts



(8) M8 Washers



(10) Spacers



(10) M6 x 20 Flathead Bolts



(1) M6 Hex Key



(1) M5 Hex Key



(1) M4 Hex Key

Frame Assembly

1. Install (2) M6 Square Nuts into the left and right side of the DEK™ nose.

NOTICE **These instructions depict the assembly of the LIT DEK model. Assembly and installation of the DEK is identical for all models.**

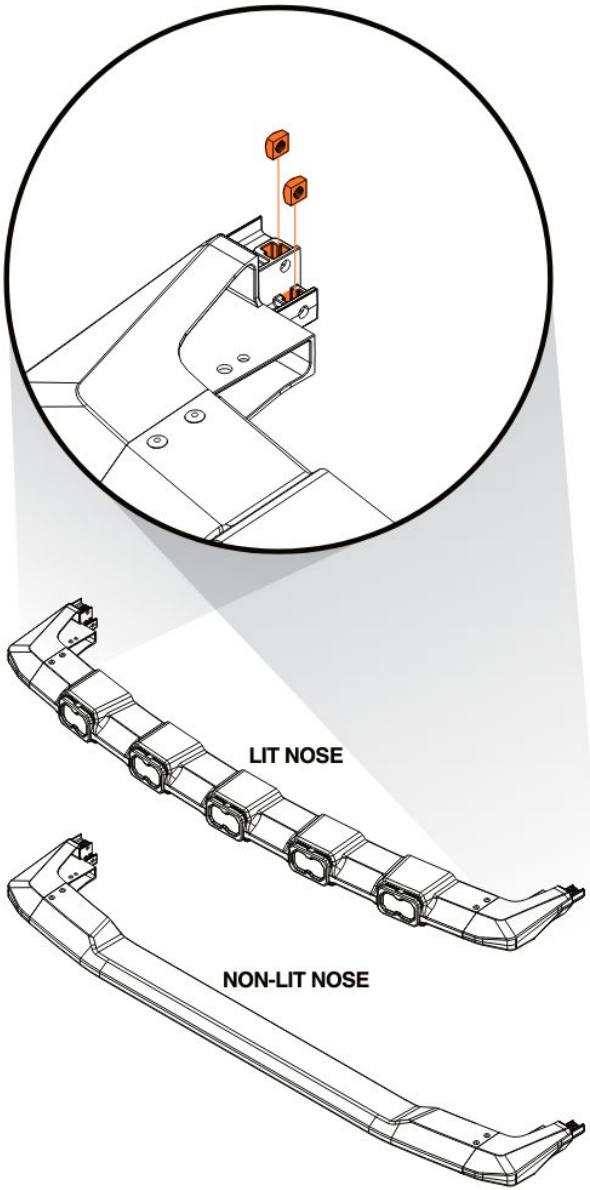

2 Install (2) M6 Square Nuts into the left and right side of the DEK™ tail.

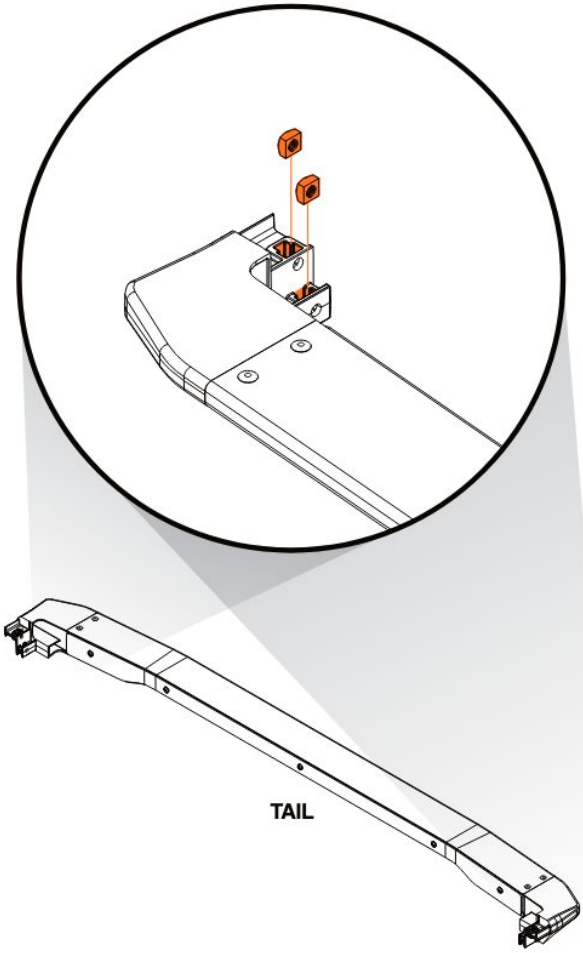

3 Insert DEK™ nose into left and right DEK frames.

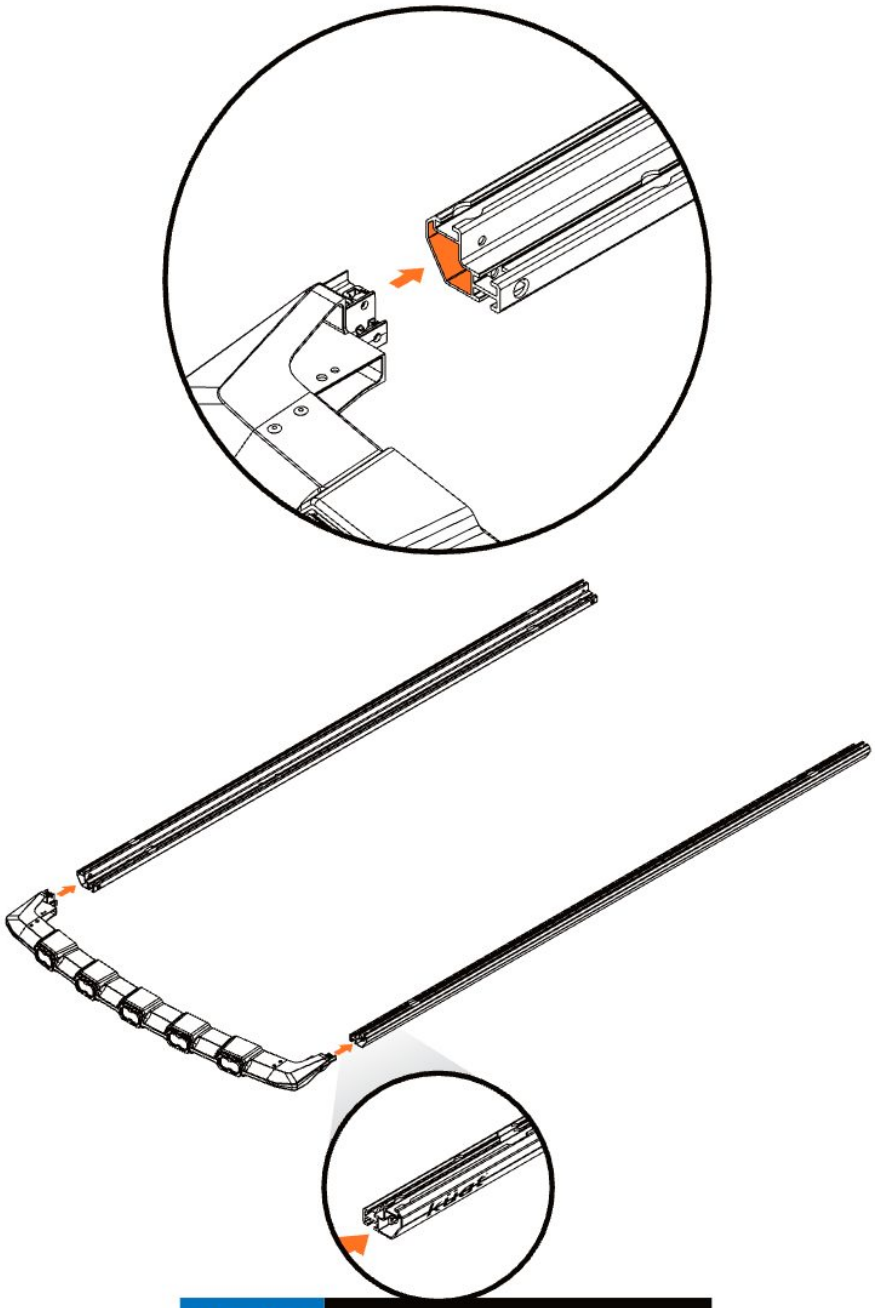

NOTICE Logo on frame oriented toward nose.

4 Install (4) M6 x 14 Bolts and (4) 6mm Washer into previously placed Nose M6 Square Nuts.

NOTICE **Leave M6 x 14 bolts loose until after installation and torquing of Load Bar bolts. Medium-strength thread locker is recommended.**

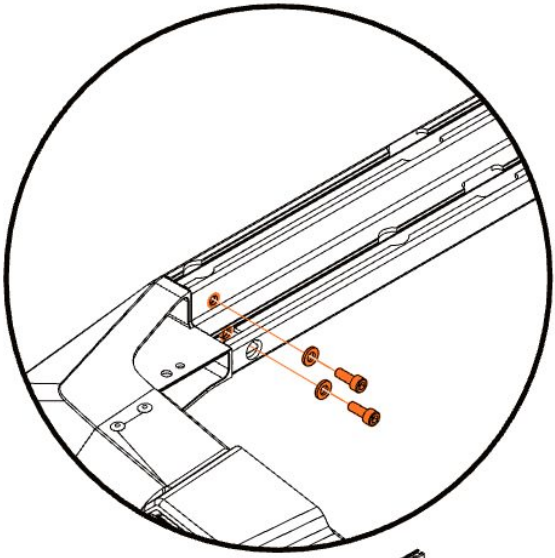



5 Insert DEK™ tail into left and right DEK™ frames.

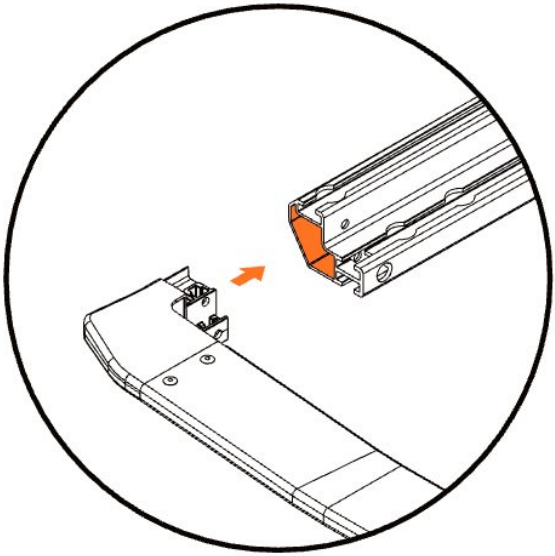



NOTICE

If this piece feels difficult to assemble, grab a friend who can hold one end in place.

6 Install (4) M6 x 14 Bolts and (4) 6mm Washer into previously placed Tail M6 Square Nuts.

NOTICE **Leave M6 x 14 bolts loose until after installation and torquing of Load Bar bolts. Medium-strength thread locker is recommended.**

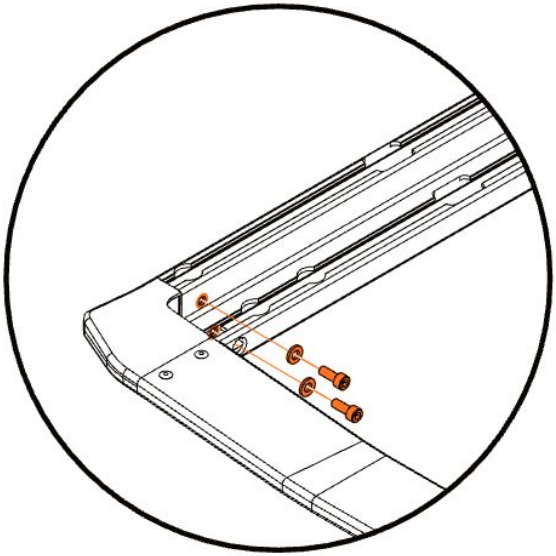



5th Gen Toyota 4Runner Front Mount

NOTICE

Reference your product parts list for mount identification.

1. With DEK™ frame fully assembled, install the Driver (Part #002660) and Passenger (Part #002661) Front Mount, into the front mount position using (1) M8 Bolt, (1) M8 Washer, and (1) M8 Nut.

NOTICE The 5th Gen Toyota 4Runner Front Mounts rest on vehicle roof. They are not bolted in.

NOTICE Medium-strength thread locker is recommended.

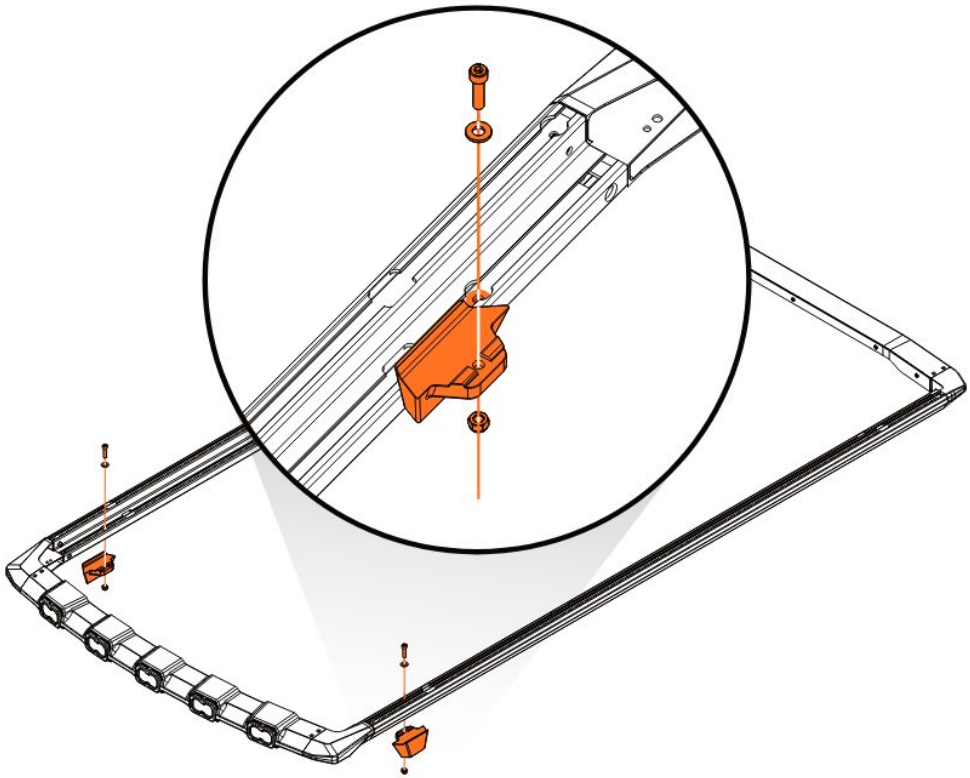

NOTICE

Front Mount installation for 5th Gen 4Runner only.

Load Bar Installation

1. Locate and organize DEK™ load bars and hardware:

	LOAD BAR	M6x20	T-NUTS	SPACERS
2024-PRESENT TOYOTA TACOMA	5	10	10	10
2005-2023 TOYOTA TACOMA	5	10	10	10
2010-2024 TOYOTA 4RUNNER	8	16	16	16

2. Insert (2) Spacers into the left and right bottom t-channel of the Load Bar. These Spacers align with the bolt holes at each end.

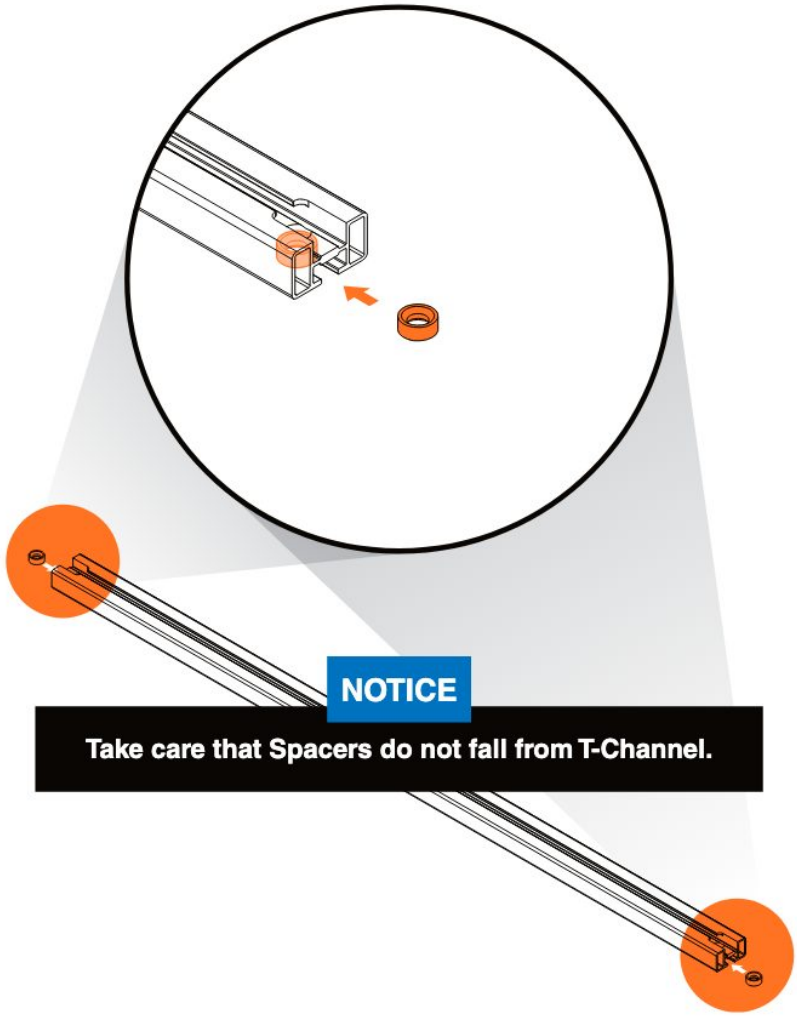

3 Slide T-Nuts into the lower left and right DEK™ frame t-channels. Horizontally align these T-Nuts with each other.

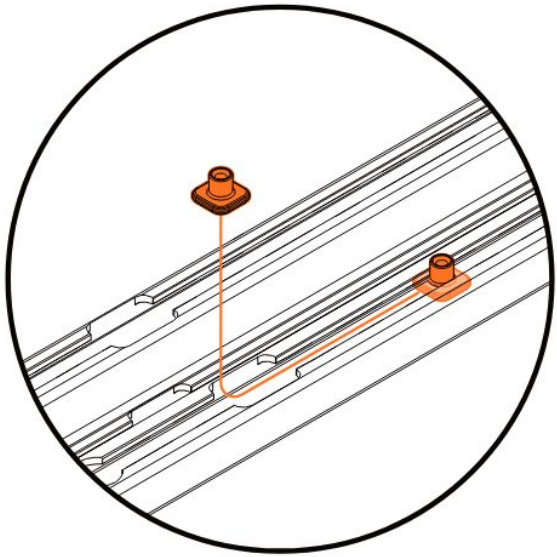

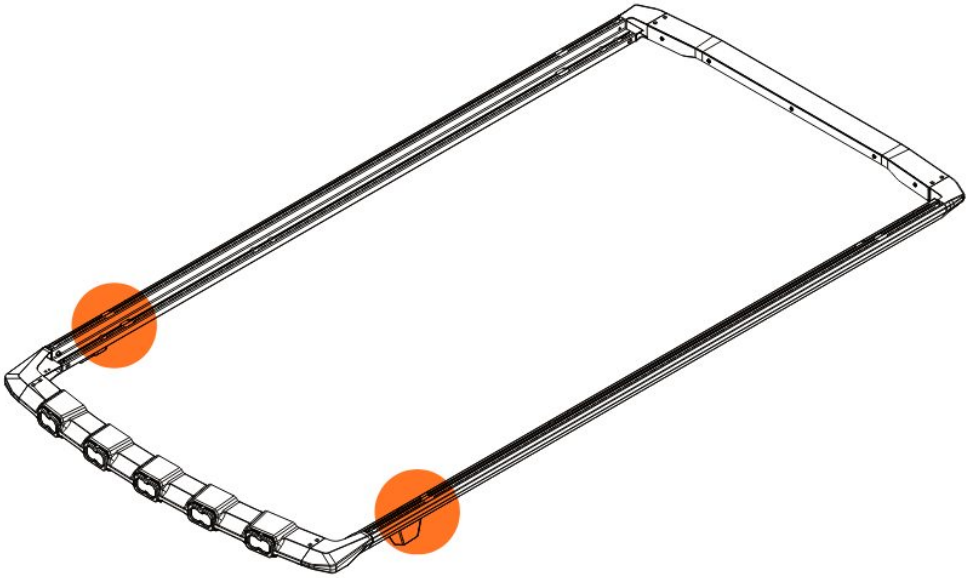

4 Install Load Bar into previously placed T-Nuts using (2) M6x20mm bolts. Ensure the Load Bar is horizontally aligned.

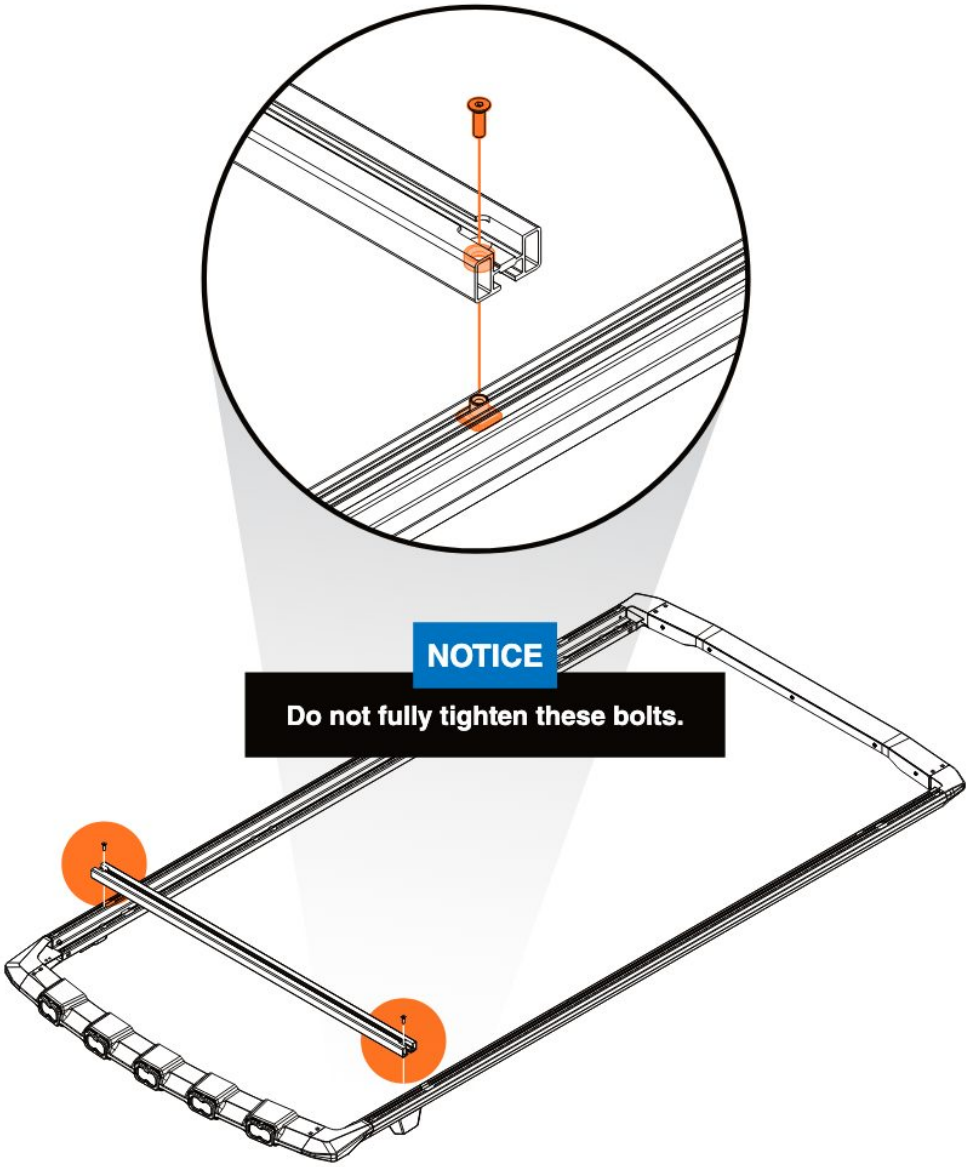

5 Repeat Steps 1 - 4 of the Load Bar Installation section for the remaining Load Bars. Space the bars as evenly as possible

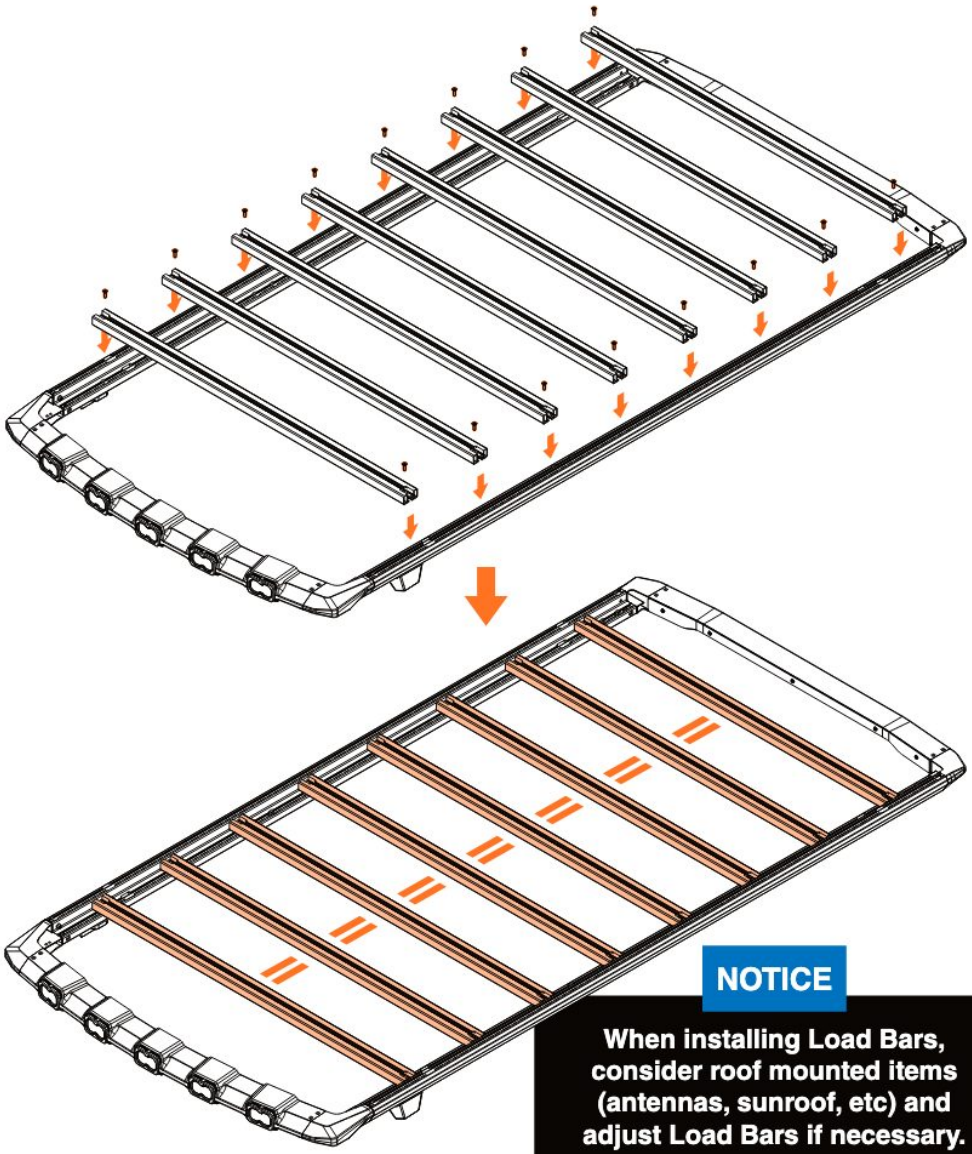

NOTICE

When installing Load Bars, consider roof mounted items (antennas, sunroof, etc) and adjust Load Bars if necessary.

6 With all Load Bars installed and as evenly spaced as possible, torque all M8 bolts to 9 Nm. Do not overtighten.

⚠ CAUTION **Torque bolts to 9 Nm. Do not overtighten.**

7 Fully tighten the M6 x 14 frame bolts installed during the frame assembly.

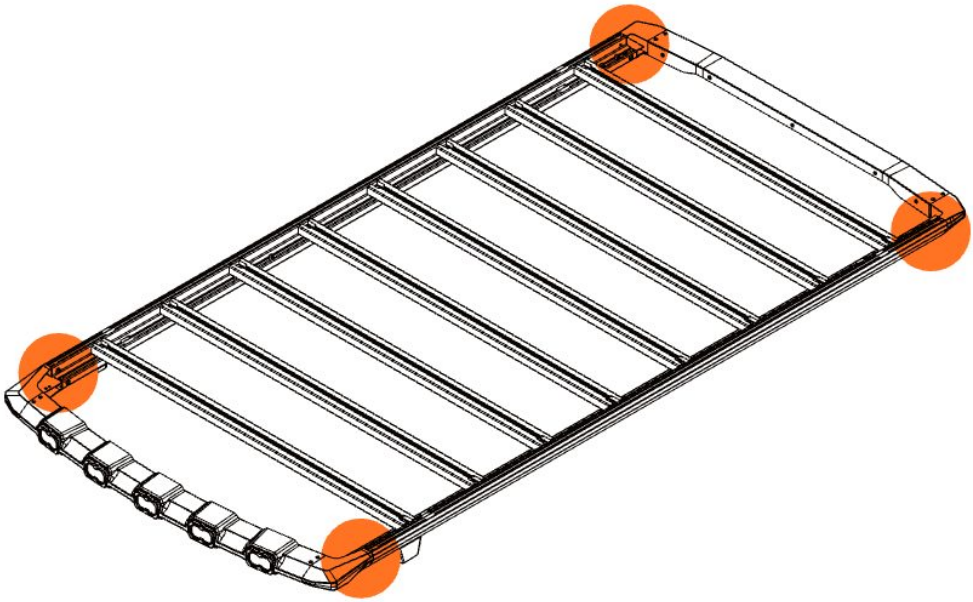

CAUTION

Torque (8) M6 x 14 Bolts installed during Frame Assembly to 9 Nm.

Roof Installation

A OEM ROOF RAILS

NOTICE **Follow these instructions if your vehicle already has factory roof rails installed.**

1. Consult your vehicle manufacturer owners manual for information on how to disassemble and remove your OEM factory roof rails.

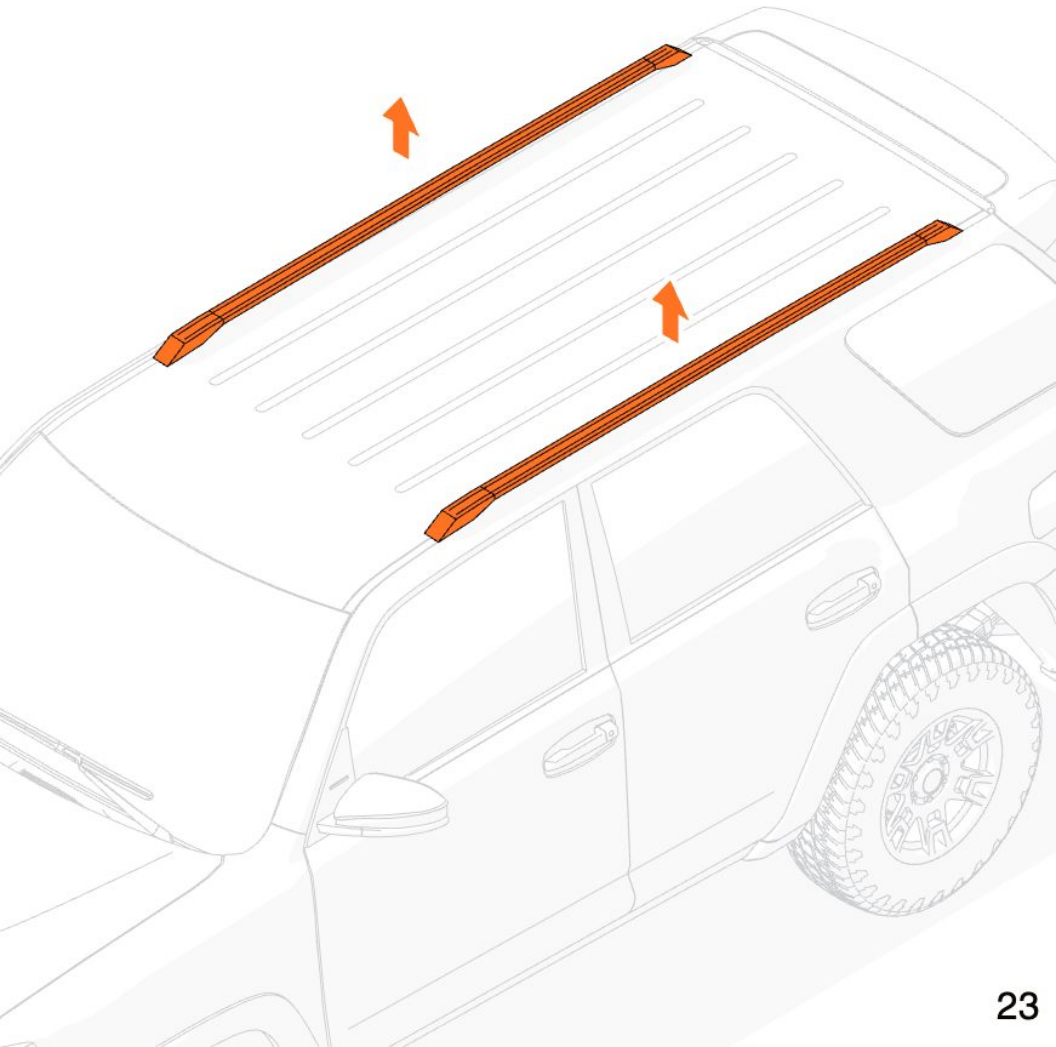

2 Apply Exterior Silicone Sealant around and inside bolt bosses in all four mounting locations.

NOTICE **Install mounts before silicone hardens.**

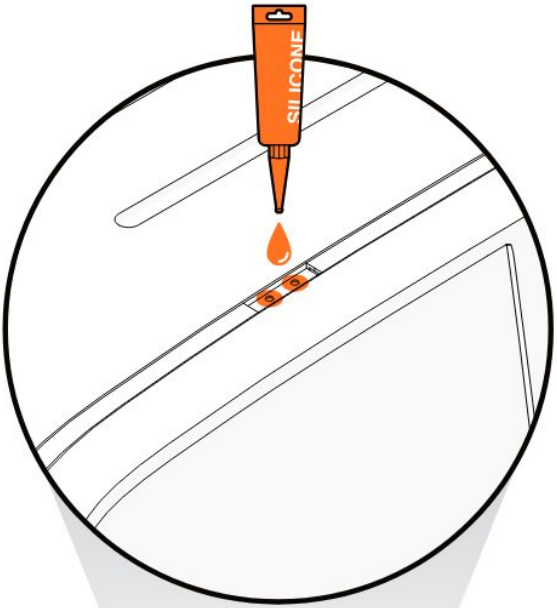



Vehicle Mounts

NOTICE

Your vehicle mounts are product and position specific.

Reference your DEK™ model parts page and locate the vehicle mounts described in the instruction. The mount is printed with the appropriate part number.

Take note of which mount is Driver and Passenger side-specific.

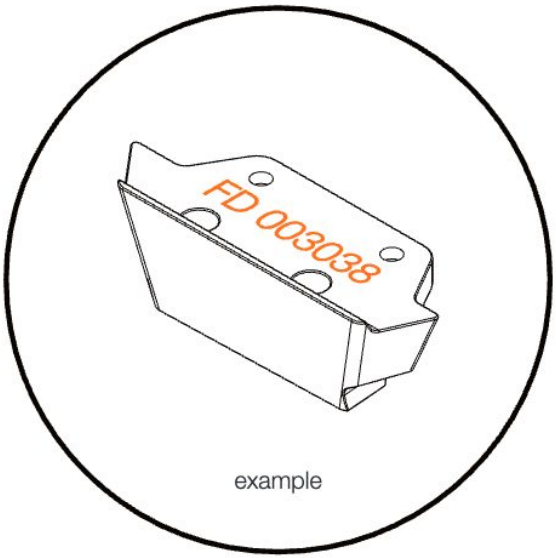

example

3 Install Direct Mount to the silicone-treated vehicle roof mounts using (2) Bolts, (2) Washers. Repeat for the 3 remaining Direct Mounts. Review the chart to see quantities and sizes for your specific DEK™ model:

NOTICE **Medium-strength thread locker is recommended.**

	M8x40	M6x55	WASHER
2024-PRESENT TOYOTA TACOMA	8	-	8
2005-2023 TOYOTA TACOMA	-	8	8
2010-2024 TOYOTA 4RUNNER	8	-	10

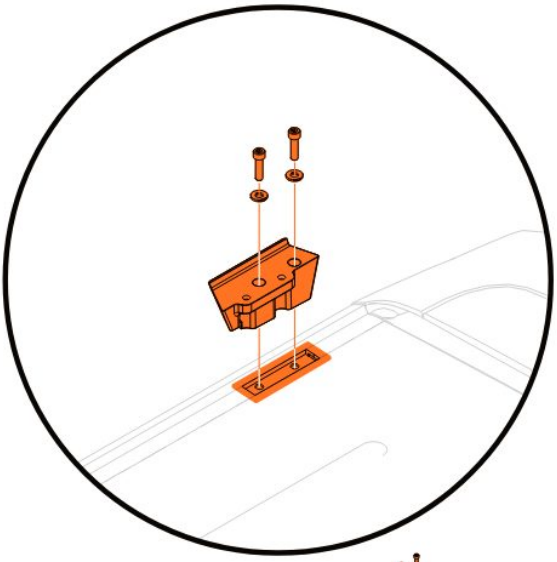

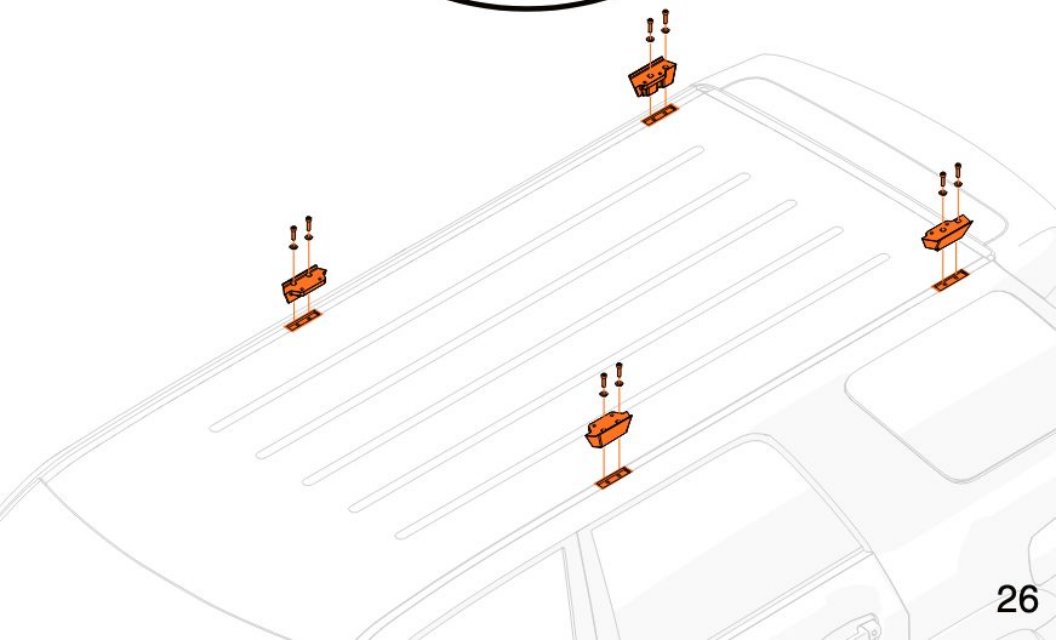

4 Team lift the assembled DEK™ onto the vehicle roof. Ensure mount holes on the left and right frame sides are aligned with Direct Mount holes on the vehicle roof. With holes aligned, secure rack to each mount using (2) Bolts and (2) Washers.

NOTICE Medium-strength thread locker is recommended.

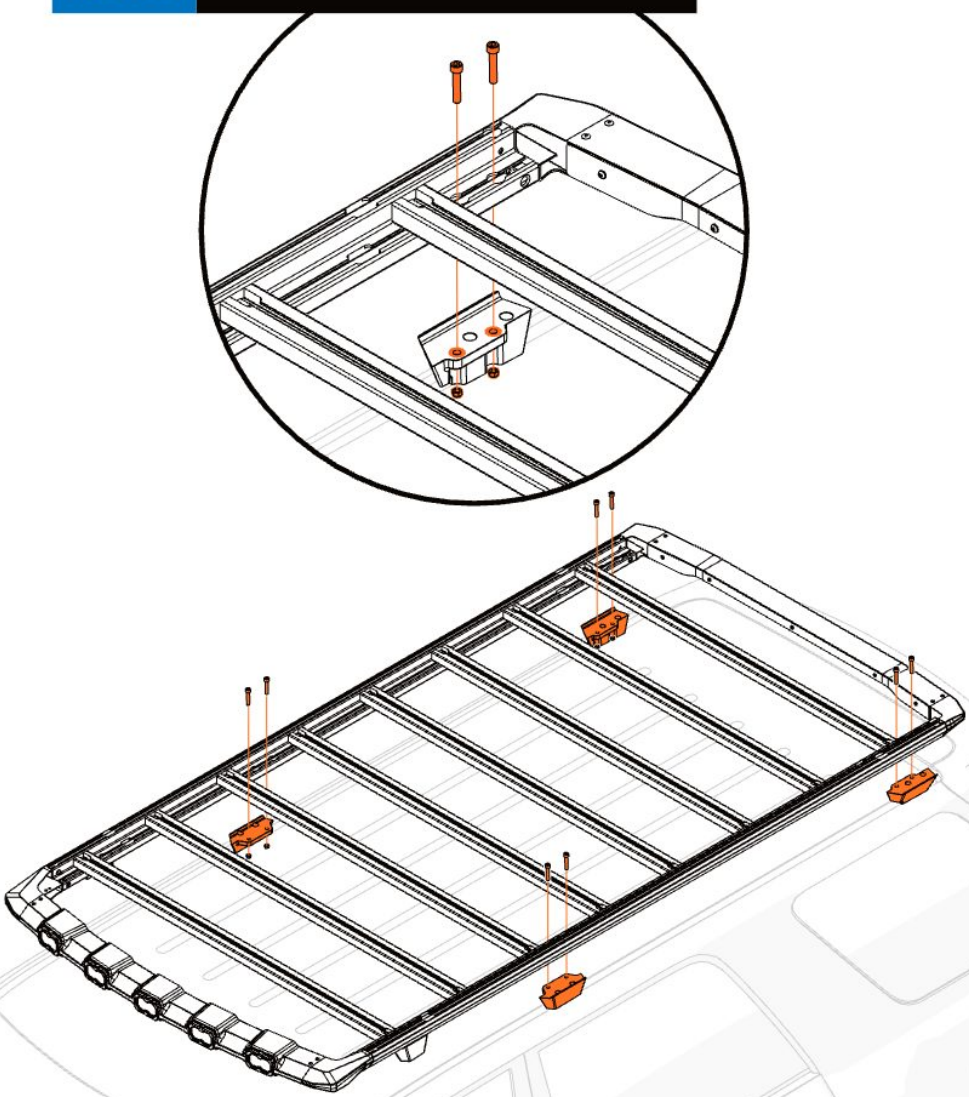

NOTICE Fold vehicle mirrors inward if possible to make lifting the DEK™ into position easier.

⚠ CAUTION Torque bolts to 21 Nm.

NOTICE Follow these instructions if your vehicle does not have factory roof rails installed.

1. Use a plastic trim or pry tool to carefully peel and remove driver and passenger side vehicle Drip Molding.

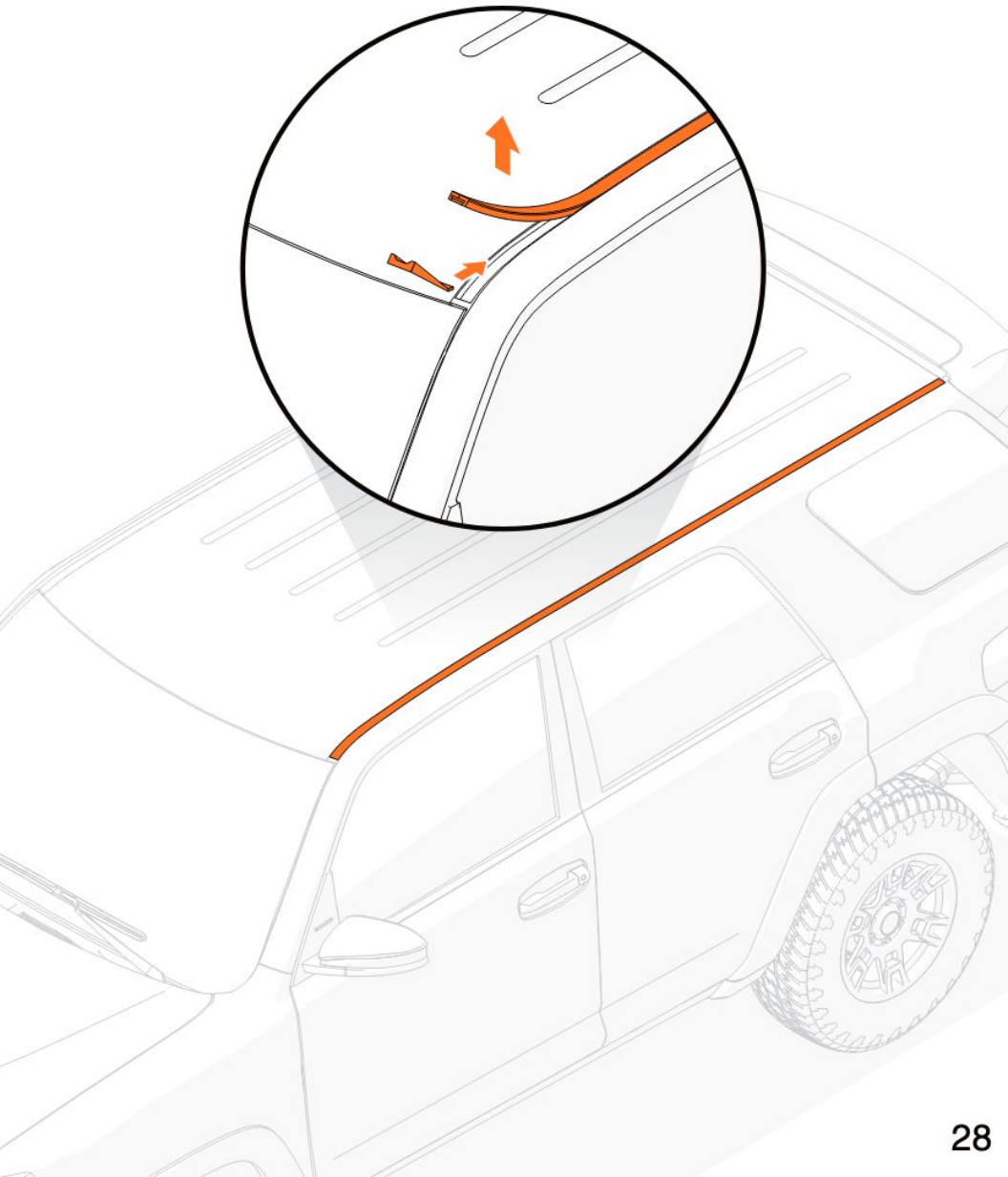

2 Use a razor blade or scraping tool to carefully remove any pre-existing butyl tape or foam from bolt holes.

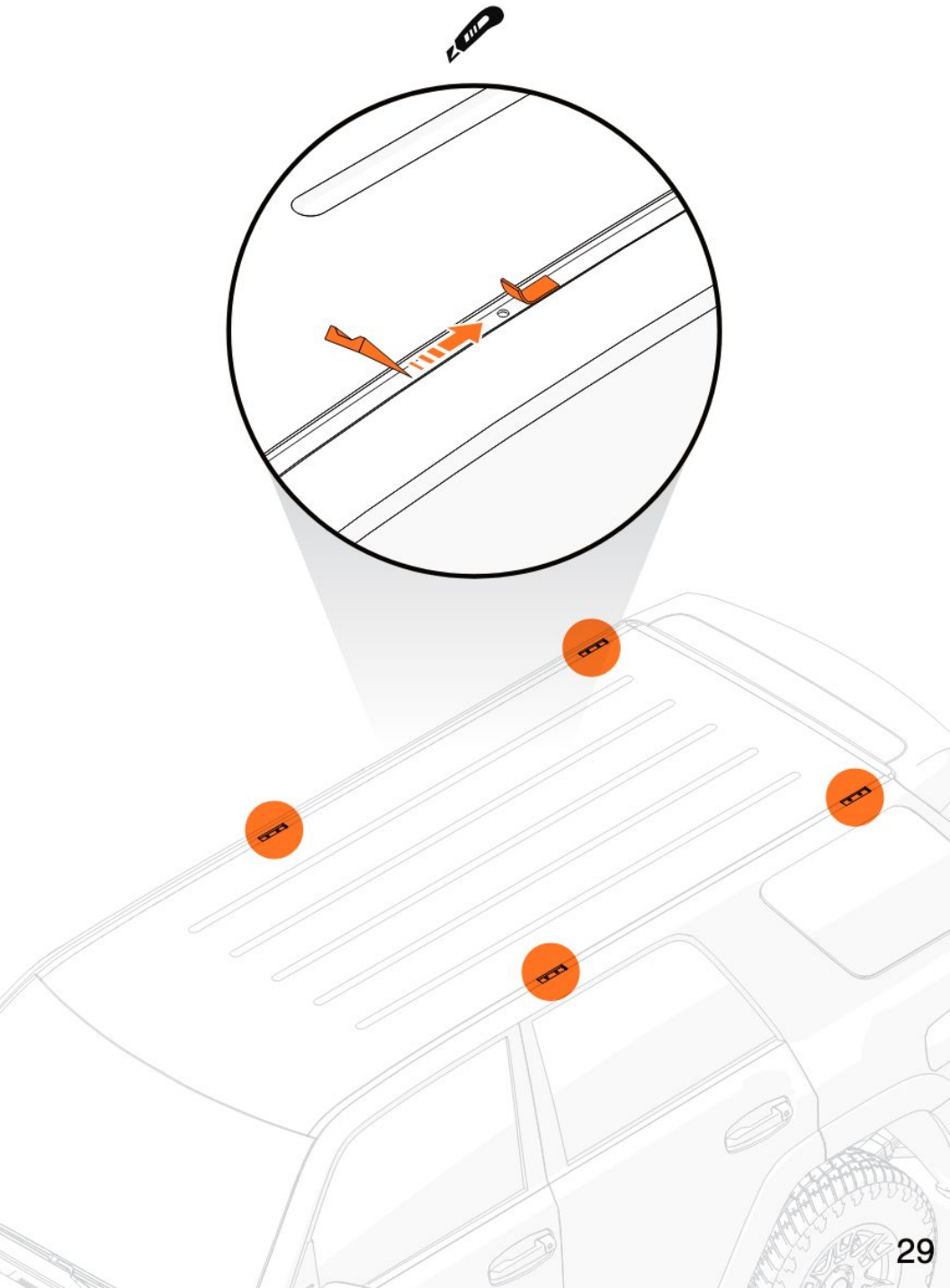

Vehicle Mounts

NOTICE

Your vehicle mounts are product and position specific.

Reference your DEK™ model parts page and locate the vehicle mounts described in the instruction. The mount is printed with the appropriate part number.

Take note of which mount is Driver and Passenger side-specific.

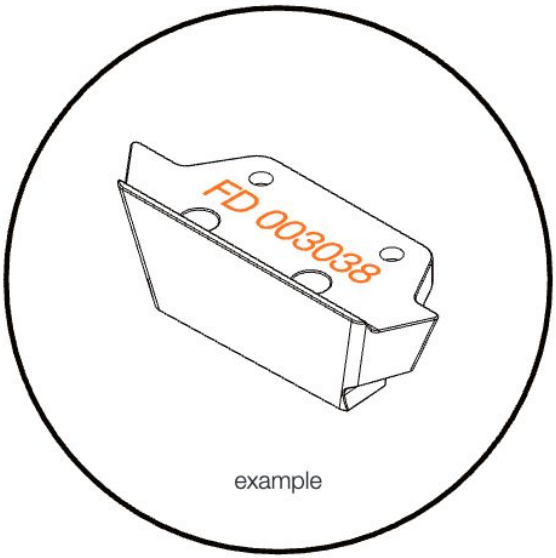

example

3 Measure the outside face of Front and Rear Mounts.

Using this measurement mark and trim Drip Molding above each mount location.

Reinstall trimmed Drip Molding around your mounts. It may be necessary to use VHR tape.

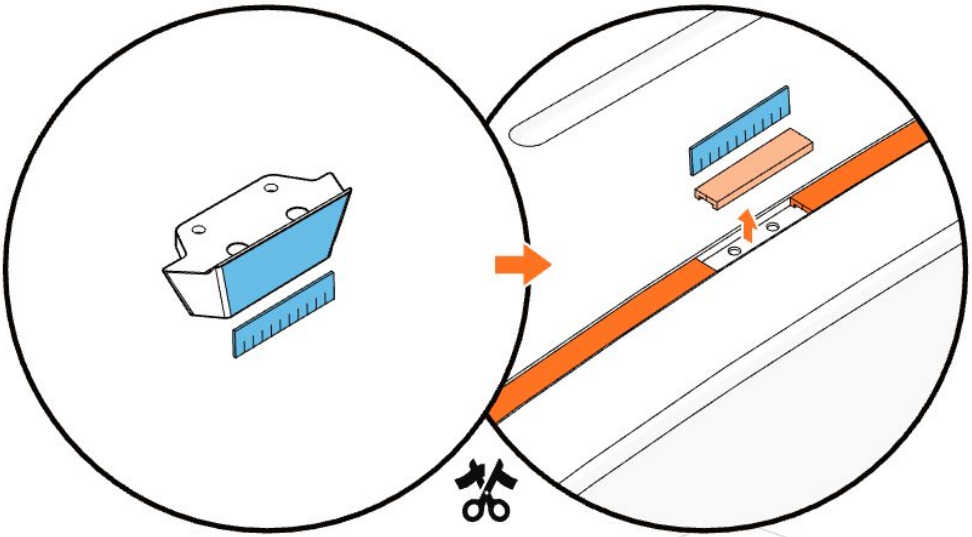

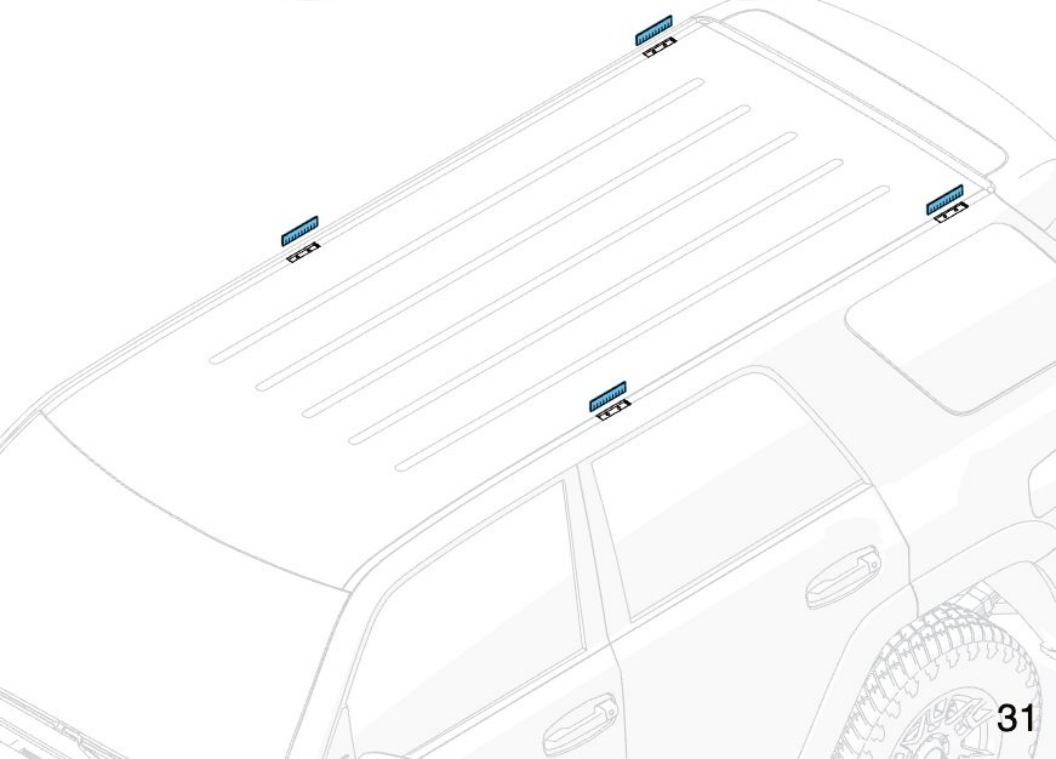

4 Apply Exterior Silicone Sealant around and inside bolt bosses in all four mounting locations.

NOTICE **Install mounts before silicone hardens.**

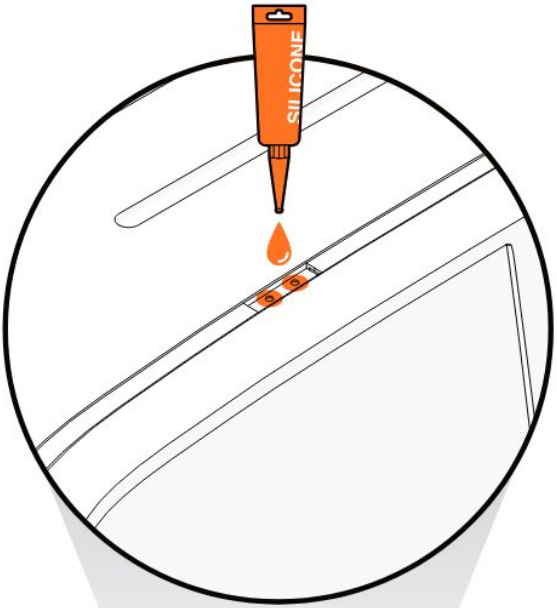



5 Install Direct Mount to the silicone-treated vehicle roof mounts using (2) Bolts, (2) Washers. Repeat for the 3 remaining Direct Mounts.

NOTICE Medium-strength thread locker is recommended.

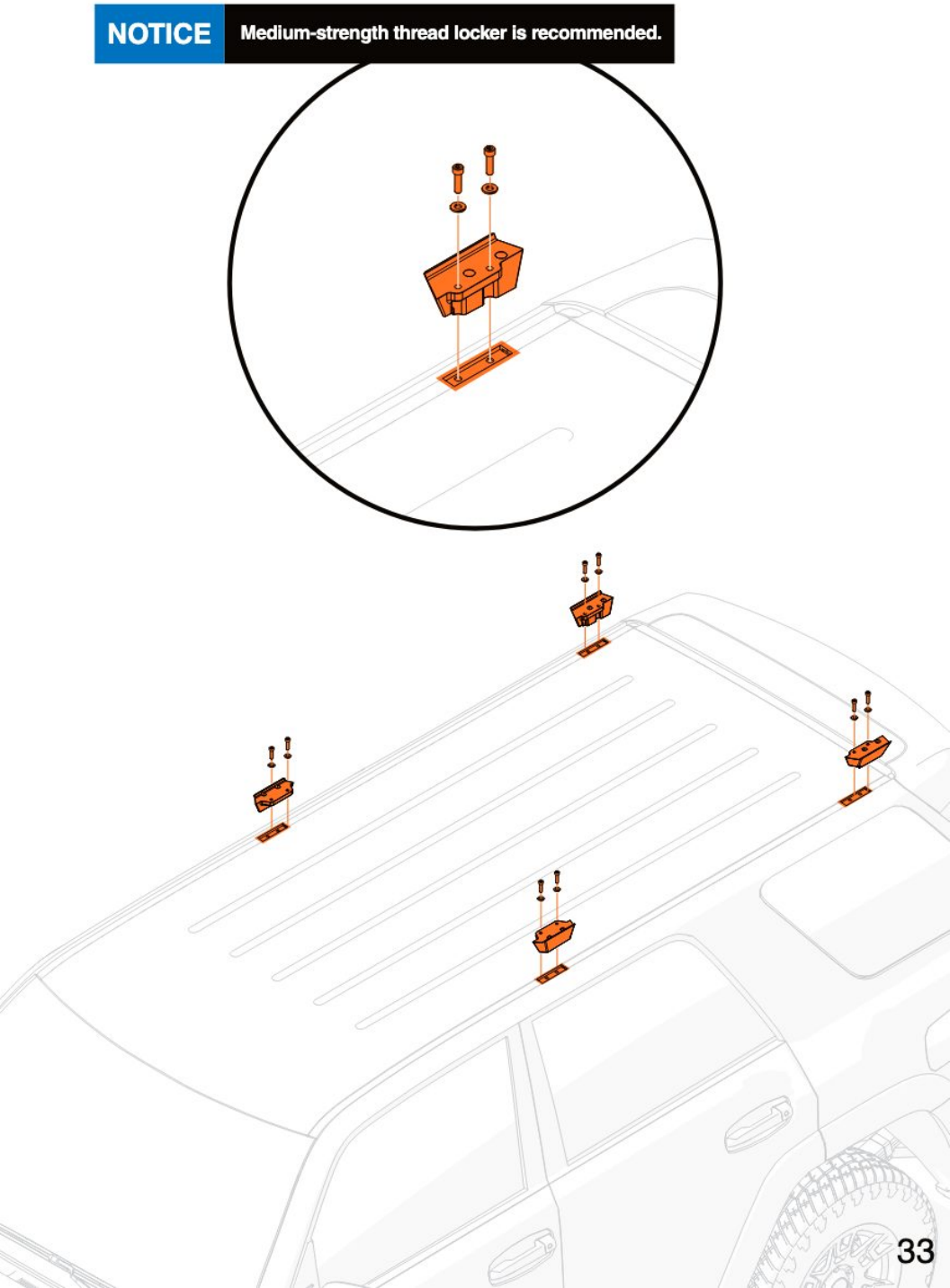

6 Team lift the assembled DEK™ onto the vehicle roof. Ensure mount holes on the left and right frame sides are aligned with Direct Mount holes on the vehicle roof. With holes aligned, secure rack to each mount using (2) Bolts and (2) Washers.

NOTICE Medium-strength thread locker is recommended.

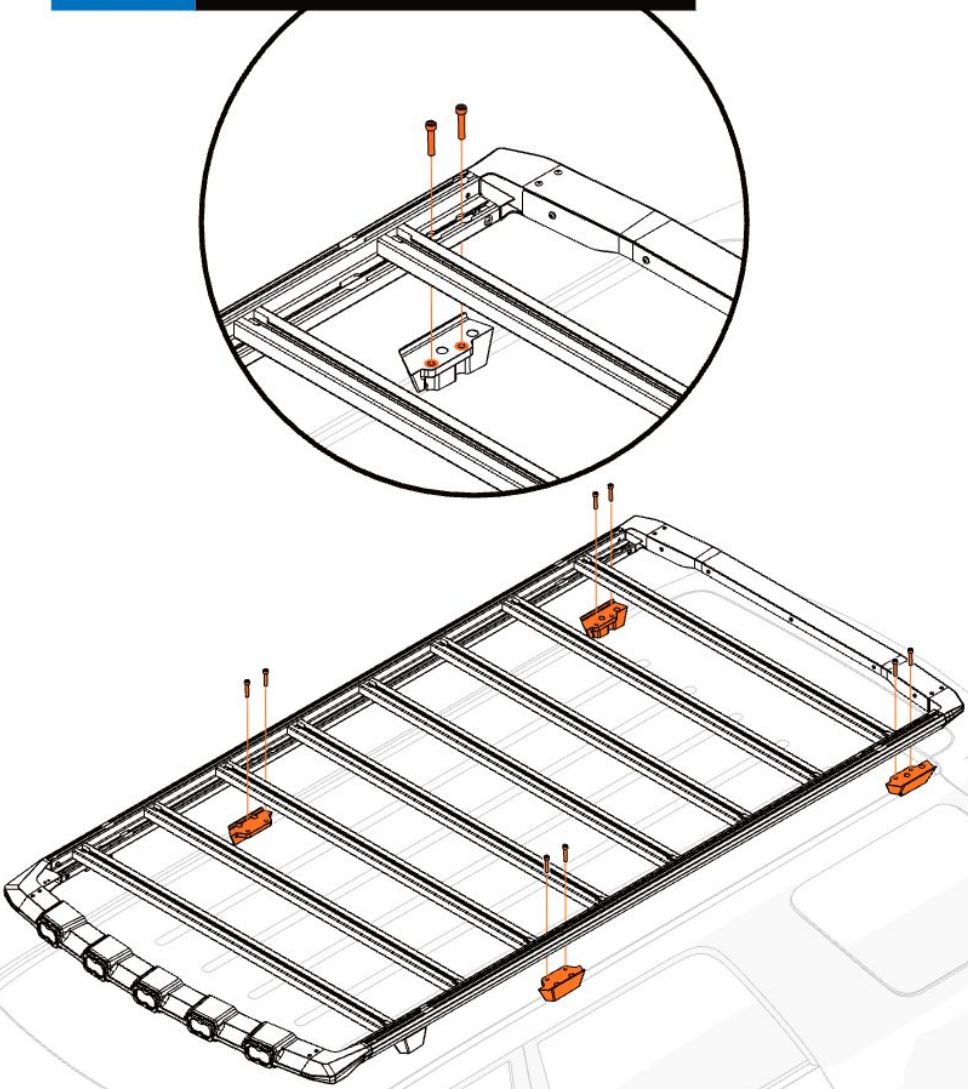

⚠ CAUTION Torque bolts to 21 Nm.

DEK™ Light Bar Wiring Installation

WARNING

IMPORTANT: Disconnect car battery before attaching electrical wiring.

This harness is intended to be used with Diode Stage Series LEDs with backlight functionality. This harness should not be used on a 24V system. If you are unclear on this process, we strongly recommend professional installation. Basic installation instructions are included below. Please contact us if you have any questions.

1. Determine a suitable location to mount the relay, near the battery or main power terminal.
2. Disconnect car battery. Connect the red power input wire to the positive battery/power terminal. Connect the black ground wire to the negative battery terminal or a factory grounding point.

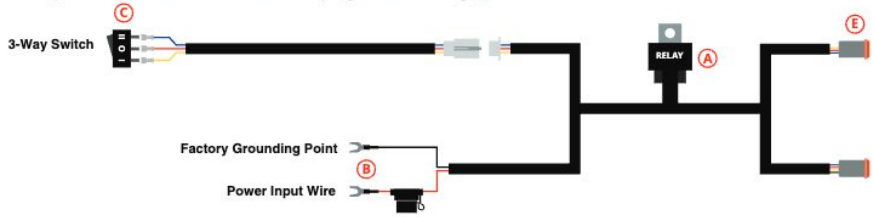

3.

METHOD ONE: Add New Switch to Vehicle

Determine a suitable location to mount the switch in the cabin of the vehicle. Route the switch wiring to that location. This may require going through the vehicle firewall. We recommend following the path of the factory wiring harness, and unplugging the switch while routing the wires. Drill a 3/4 inch hole and mount the switch. Reconnect wires to switch, with the red wire in the center position.

METHOD TWO: Use OEM Upfitter/Auxiliary Switches

An extra wire pigtail is included with this harness, which should be used if you plan to control your lights with factory-installed "OEM" switches. At the white connector, unplug the switch wires from the harness, and connect the extra pigtail here instead. Using the butt connectors at the end of the pigtail, crimp the yellow wire and blue wire to OEM Auxiliary Switch wire leads. The yellow wire will activate the main LED power, and the blue wire will activate the backlight LED power.

DEK™ Light Bar Wiring Diagram

NOTE: The main LED power will be drawn from the battery, so any OEM Auxiliary Switch wires can be used, regardless of amperage rating.

4. Route the output wire(s) to each LED, avoiding any moving parts or direct contact with heat sources. Plug the output connector into the LED.

5. Test thoroughly, and aim the LED appropriately based on use. Please check your local laws and regulations regarding aiming, installation, and restrictions for on-road use, as applicable.

NOTICE **We recommend professional installation.**